FCoE: Ethernet Direct-Attached Fabrics (EDAF)

An EDAF is an FCoE fabric that consists of:

- An Ethernet fabric consisting of any number of enhanced ethernet switches, hubs, bridges, etc.
- One of more ENodes with VN_Ports attached directly to the ethernet fabric.
- One or more FCFs with VF_Ports attached to the ethernet fabric.

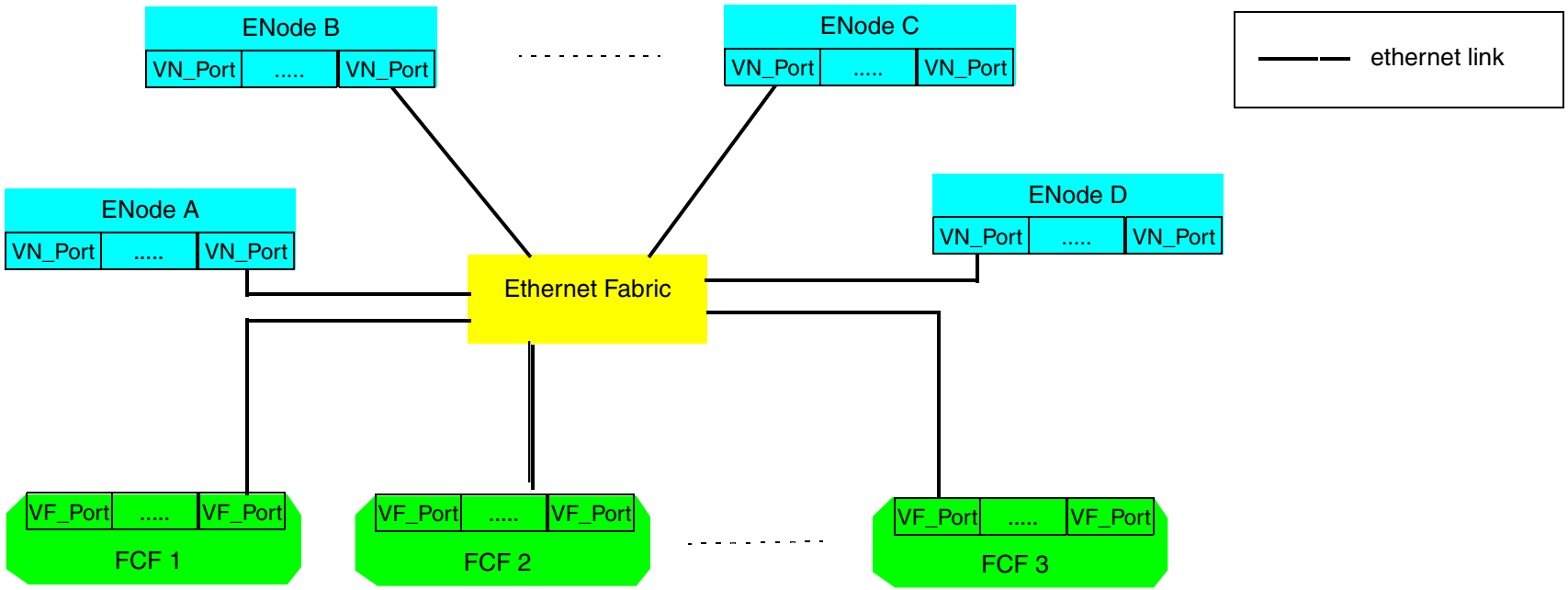

Figure 1. Ethernet Direct-Attached Fabric (EDAF)

VN_Port Fabric Discovery

A VN_Port performs a solicitation ELS (SOLI) request encapsulated in a multicast FCoE frame to determine the set of FCFs that are available to the VN_Port for fabric login. Each FCF in the multicast group sends an advertisement (ADV) ELS request sequence to the VN_Port. The MAC and FC addresses used in each of the ELS requests are shown on the following page.

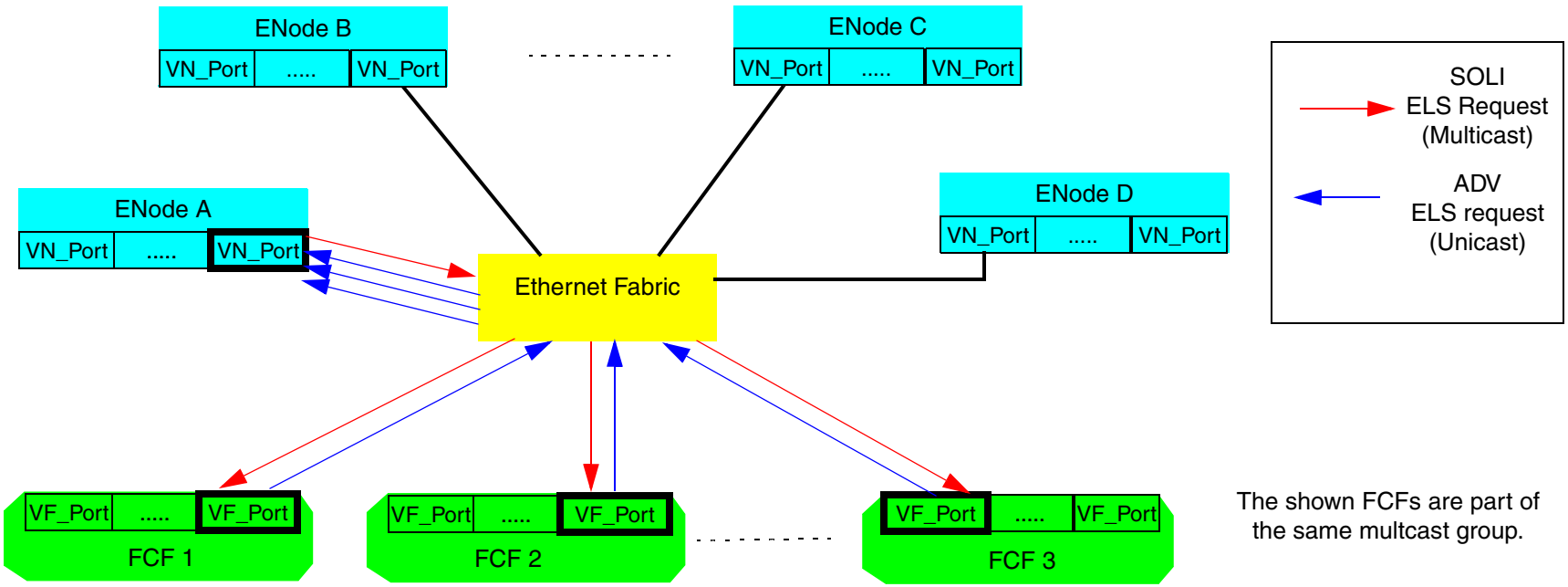

Figure 2. Solicitation and Advertisement ELS requests

Solicitation (SOLI) ELS Request

The SOLI request is encapsulated within an FCoE frame in as shown below:.

	Source Address	Destination Address
FCoE Header	Universal MAC address of VN_Port	Multicast Address
FC Header	zeros	x'FFFFFE'

Figure 3. Ethernet Packet Containing a SOLI Request

There is no reply sequence to the SOLI request

Advertisement (ADV) ELS Request

The ADV request is encapsulated within an ethernet frame in as shown below:.

	Source Address	Destination Address
FCoE Header	Universal MAC address of VF_Port	Universal MAC address of VN_Port
FC Header	x'FFFFFE'	zeros

Figure 4. Ethernet Packet Containing an ADV Request

- The payload of the ADV request contains information such as the fabric and switch names.
- The payload also includes a 3-byte **fabric-assigned identifier** (FAI) that is to be used as the first 3 bytes of the MAC address for the VF_Port when generated MAC addressing is used.

VN_Port to FCF Association

A VN_Port performs fabric login by sending an FLOGI ELS request to a VF_Port out of the set of VF_Ports specified by the ADV ELS requests received by the VN_Port. The criteria for selecting a VF_Port/FCF is not specified in this document. NPIV VN_Port IDs are established by sending FDISC requests to the selected VF_Port. The MAC and FC addresses used in the FLOGI, FDISC and LS_ACC sequences are shown on the following page.

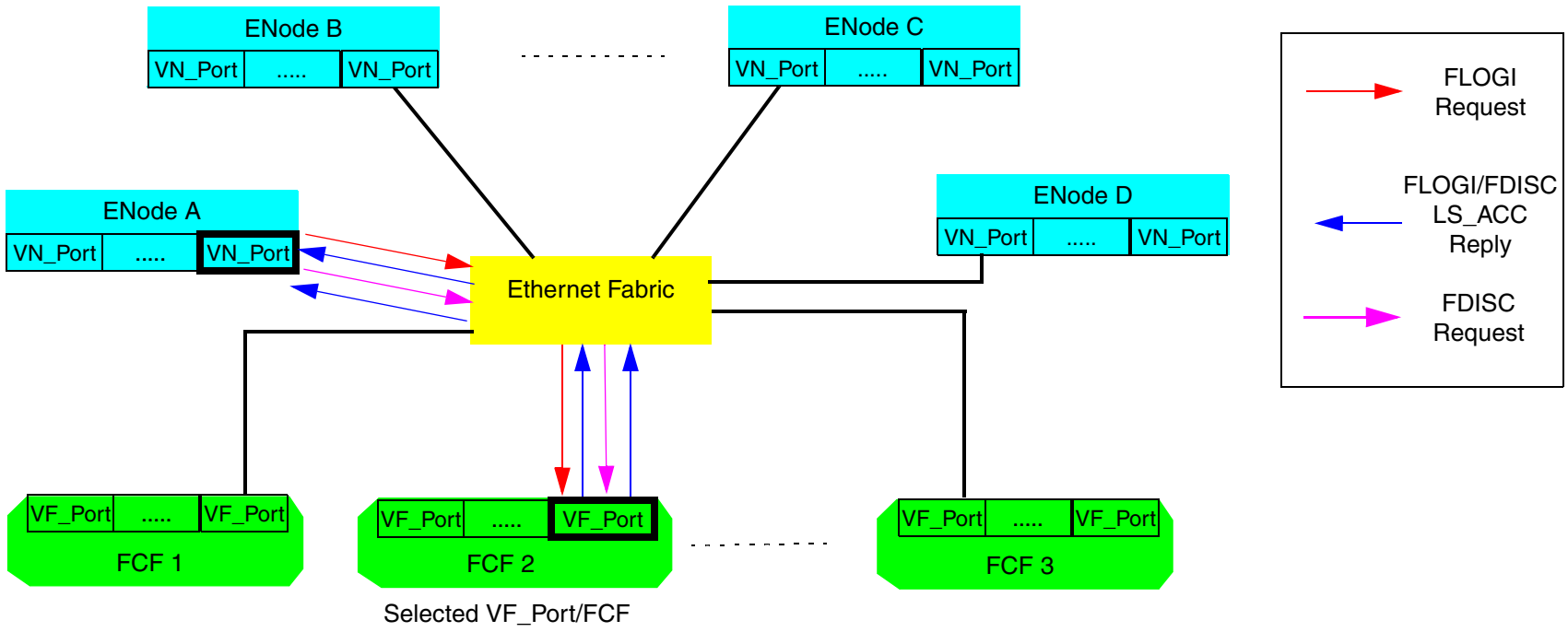

Figure 5. FLOGI /FDISC Requests and LS_ACC Replies

VN_Port to FCF Association (cont.)

Two options for addressing are defined for addressing VN_Ports within an EDAF:

- **Global MAC addressing -** VN_Ports and VF_Ports make use of a universally administered MAC address. The address consists of a 3-byte IEEE assigned Organizationally Unique identifier (OUI) field and a 3-byte NIC address that is generally set by manufacturer to guarantee uniqueness. Since the address is universally administered, data exposures due to duplicate addresses is minimized.

- **Generated MAC address** - a VN_Port derives its MAC address by concatenating the 3-byte VN_Port ID to the 3-byte fabric-assigned identifier (FAI). Because the address contains an N_Port ID that is assigned by a single fabric, the addressing does not guarantee uniqueness across multiple fabrics without management mechanisms that span multiple fabrics. The VF_Port, as well as all VE_Ports, always use their universally administered MAC address.

The form of address to be used by a VN_Port is indicated by the “address-type” bit (new) in the FCoE header returned by the FLOGI. The bit, when set to one, indicates that generated MAC addressing is to be used; when the bit is set to zero, global MAC addressing is to be used.

VN_Port to FCF Association (cont.)

Fabric Login

Fabric login is performed by encapsulating the FLOGI requests and reply in an FCoE ethernet packet as shown below. The FLOGI is sent to the selected VF_Port/FCF.

	Source Address	Destination Address
FCoE Header	Universal MAC address of VN_Port	Universal MAC address of selected VF_Port
FC Header	zeros	x'FFFFFE'

Figure 6. Ethernet Packet Containing an FLOGI Request

Global Address Mode FLOGI LS_ACC Reply

The address-mode bit in the FCoE header is set to zero to indicate global-address mode.

	Source Address	Destination Address
FCoE Header	Universal MAC address of selected VF_Port	Universal MAC address of VN_Port
FC Header	x'FFFFFE'	Assigned VN_Port ID

Figure 7. Ethernet Packet Containing a FLOGI LS_ACC - Global Addressing

The universally administered MAC addresses for the VN_Port and VF_Port continue to be used in the FCoE header for all subsequent FCoE frames sent/received by the VN_Port. The assigned VN_Port ID is provided only in the FC header.

Fabric Login (cont.)

Generated Address FLOGI LS_ACC Reply

The address-mode bit in the FCoE header is set to one to indicate generated-address mode.

	Source Address	Destination Address
FcoE Header	Universal MAC address of selected VF_Port	Universal MAC address of VN_Port
FC Header	x'FFFFFE'	Assigned VN_Port ID

Figure 8. Ethernet Packet Containing a FLOGI LS_ACC - Generated Addressing

The following actions are performed when the FLOGI response is received:

- The VN_Port MAC address is generated by concatenating the assigned 3-byte VN_Port ID to the 3-byte FAI specified in the ADV ELS request -> VN_Port MAC address = FAI || assigned VN_Port ID.
- Local MAC Address registration/update is performed at the VN_Port adapter for the generated MAC address.
- The VN_Port adapter broadcasts a gratuitous ARP on the ethernet fabric to inform switches of the new MAC address for the VN_Port.

The generated MAC address for the VN_Port and universal MAC address of the VF_Port are used in the FCoE header for all subsequent FCoE frames sent/received by the VN_Port. The assigned VN_Port ID is also provided in the FC header.

The following actions are performed when an explicit or implicit fabric logout occurs:

- The generated MAC address is removed at the VN_Port adapter.
- The FCF broadcasts a gratuitous ARP on the ethernet fabric to inform switches that the MAC address is no longer associated with the VN_Port adapter.

NPIV Support (FDISC)

NPIV VN_Port IDs are obtained by encapsulating FDISC requests and replies in an FCoE ethernet packet as shown below. The FDISC requests are sent to the VF_Port that VN_Port is logged into.

Global/Generated Address Mode FDISC Request

	Source Address	Destination Address
FCoE Header	Universal MAC address of VN_Port	Universal MAC address of selected VF_Port
FC Header	zeros	x'FFFFFE'

Figure 9. Ethernet Packet Containing an FDISC Request - Global/Generated Addressing

Global Address FDISC LS_ACC Reply

The address-mode bit in the FCoE header is set to zero to indicate global-address mode.

	Source Address	Destination Address
FCoE Header	Universal MAC address of selected VF_Port	Universal MAC address of VN_Port
FC Header	x'FFFFFE'	Assigned NPIV VN_Port ID

Figure 10. Ethernet Packet Containing a FDISC LS_ACC - Global Addressing

.The universally administered MAC addresses assigned to the VN_Port and VF_Port continue to be used in the FCoE header for all subsequent FCoE frames sent/received by the VN_Port. The assigned NPIV VN_Port ID is provided only in the FC header.

NPIV Support (FDISC) - cont.

Generated Address FDISC LS_ACC Reply

The address-mode bit in the FCoE header is set to one to indicate generated-address mode.

	Source Address	Destination Address
FCoE Header	Universal MAC address of selected VF_Port	Universal MAC address of VN_Port
FC Header	x'FFFFFE'	Assigned VN_Port ID

Figure 11. Ethernet Packet Containing a FDISC LS_ACC - Generated Addressing

For each NPIV VN_Port ID established using the FDISC ELS, the following actions are performed (as done for FLOGI):

- The NPIV VN_Port MAC address is generated by concatenating the assigned 3-byte VN_Port ID in the FDSIC reply to the 3-byte FAI specified in the ADV ELS request -> NPIV VN_Port MAC address = FAI || assigned VN_Port ID.
- Local MAC Address registration/update is performed at the VN_Port adapter for the generated MAC address.
- The VN_Port adapter broadcasts a gratuitous ARP on the ethernet fabric to inform switches of the new MAC address for the VN_Port.

The following actions are performed when an explicit or implicit fabric logout occurs:

- The generated MAC address is removed at the VN_Port.
- The FCF broadcasts a gratuitous ARP on the ethernet fabric to inform switches that the MAC address is no longer associated with the VN_Port.

VN_Port to VN_Port Association

The VN_Port to VN_Port association defines, for a given VN_Port:

- the VN_Ports that it is permitted to access, and
- whether the access is indirect (routed through the FCF) or direct (routing not through the FCF).

Mechanisms that are used to establish VN_Port to VN_Port Associations are shown on the following pages. An example of direct and indirect routing is shown below.

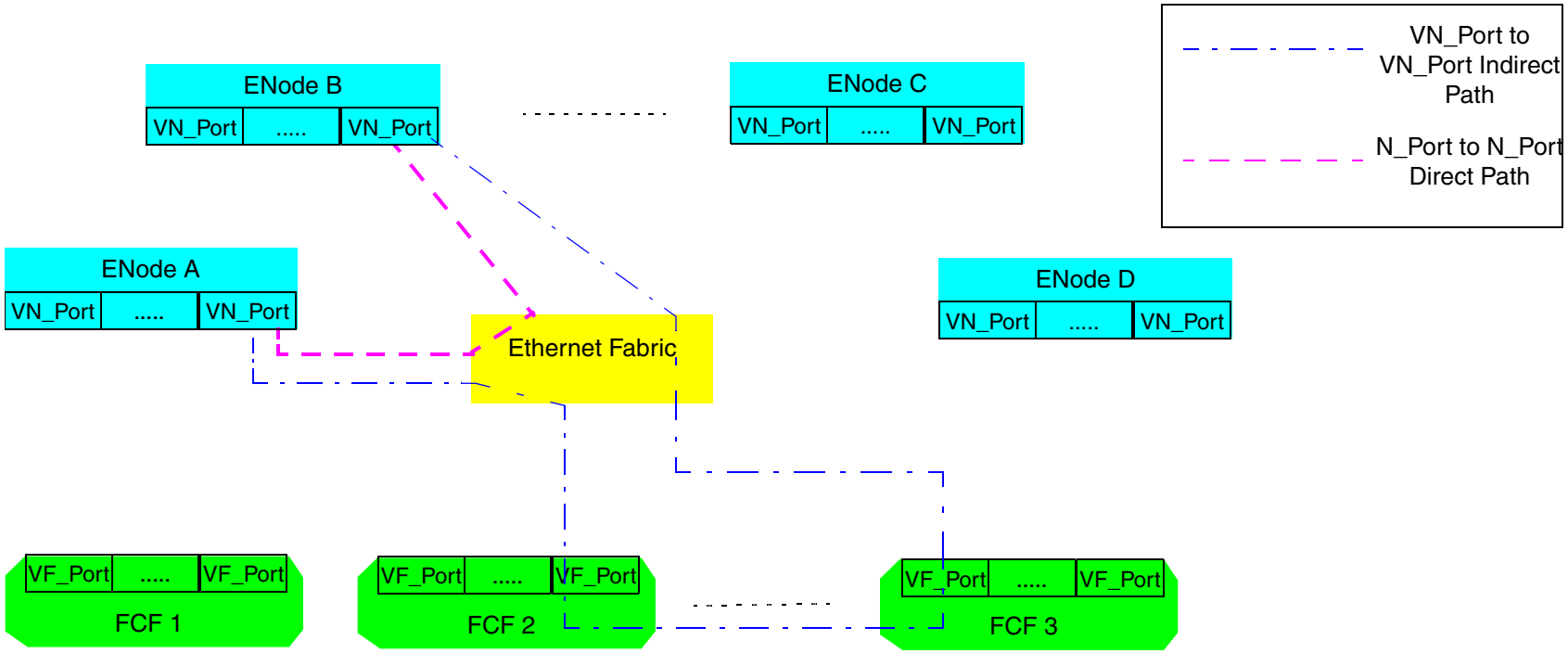

Figure 12. FCoE Direct and Indirect Paths through an Ethernet Fabric Example

VN_Port to VN_Port Association (cont.)

Each VN_Port (including NPIV N_Ports) maintains an VN_Port Mapping Table (VPMT) that identifies other VN_Port IDs that are known to this VN_Port and the associated MAC address for each of those ports. The associated MAC address is one of the following:

- The MAC address of an the VN_Port when direct routing is permitted.
- When direct routing is not possible or not permitted, the MAC address is equal to the MAC address of VF_Port specified by the FLOGI LS_ACC. The FCF performs the MAC address translation necessary to route the frame to the destination Node Identifier.

The associated MAC address may be a global or generated MAC address for direct addressing. For indirect addressing, the associated MAC address is the universal MAC address of the VF_Port that the VN Port has logged into.

The initial state of the VPMT for a VN_Port is the empty state (no entries).

N_Port ID	Associated MAC Address[1]
First Accessible N_Port ID	MAC Address
Second Accessible N_Port ID	MAC Address
. . .	. . .
Last Accessible N_Port Id	MAC Address

[1] An associated MAC Address equal to that of the MAC address of a VF_Port indicates that direct routing is not permitted or is not possible.

Table 1: VN_Port Mapping Table (VPMT) for each VN_Port

VN_Port to VN_Port Association (cont.)

A VN_Port queries the fabric name server to determine the MAC addresses that are used to access an N_Port. The name server specifies the VN_Ports that can be directly accessed by specifying the MAC address of the VN_Port. Any 2 N_Ports that are directly attached to the same ethernet fabric may be permitted to communicate directly (global or generated), but direct access may be restricted by the FCF.

The methods by which an FCF determines the directly accessible VN_Ports is not defined in this document but may include ethernet fabric discovery mechanisms, management functions and user input. Additionally, direct access may be restricted as a result of user input, security concerns or other reasons.

Possible options for the FC-GS command(s) used by a VN_Port to obtain the MAC address associated with another N_Port are:

A) A modification to the Get All Next (GA_NXT) command to include the MAC address for the port.

B) The definition of a new “Get MAC Adr” for an N_Port ID (GMA_ID)

C) The definition of a new “Get MAC Adr List” from a list of N_Port IDs.

Zoning Enforcement

Zoning enforcement is required for VN_Port to VN_Port direct communication. For indirect communication, FCF zoning enforcement is used.

- Direct path zoning enforcement must be as robust as currently defined zoning enforcement performed by FC switches:
  - **Hard Zoning Enforcement:** Zoning technique in which the Fabric limits frame exchange by frame-by-frame filtering. Hard zoning is indicated by the hard-zoning attribute bit in the zone definition. Hard zoning is preferable whenever possible.
  - **Soft Zoning Enforcement:** Zoning technique in which the fabric presents membership through the name server and enforcement is dependent on the N_Ports abiding by the contents of the Zoned Nameserver in real time (i.e. they observer and react to SCNs). This is referred to as “best-effort” zoning enforcement.
- Two options for direct path zoning enforcement:
  - At each FCoE HBA (preferred implementation) using the N_Port mapping table. The use of HBA enforced zoning eliminates or minimizes the need for modification to existing ACL mechanisms within the ethernet fabric.
  - At ethernet switches using existing ethernet ACL mechanisms.
- In all cases, FCoE HBAs must ensure that the FCoE ethertype is set only in frames for FC operations.

Zoning Enforcement at the HBA (Preferred Approach)

- The use of HBA enforced zoning eliminates or minimizes the need for modification to existing ACL mechanisms within the ethernet fabric.
- Each HBA performs zoning enforcement based on the contents of the zoned nameserver (NPMT - see Table 1 on page 11).
  - Outgoing frames are only sent by an VN_Port using the N_Port IDs and MAC addresses that are in the NPMT.
  - The N_Port IDs and MAC addresses in incoming frames must be in the NPMT at the receiving VN_Port.
- VN_Ports must register for and take appropriate action to RSCNs that are generated as a result of changes to the zone information at the zoned nameserver.
- VN_Ports must be able to issue both name server and fabric zone server generic service requests to accurately maintain the information in N_Port Mapping table.

Zoning Enforcement at Ethernet Switches

- Use ethernet ACLs based on MAC or MAC and EtherType on ingress packets to the ethernet fabric.
- ACL based on a Zone Table that identifies each zone and the MAC addresses that are in each zone.
- ACL must be dynamic based on zoning information from FC fabric. Possible Options:
  - SNMP (probably not)
  - Alternative: netconf or something new.
- Must be able to deal with NPIV - multiple N_Port IDs using the same MAC address and in different zones.

For Future Consideration - EDAF without an FCF

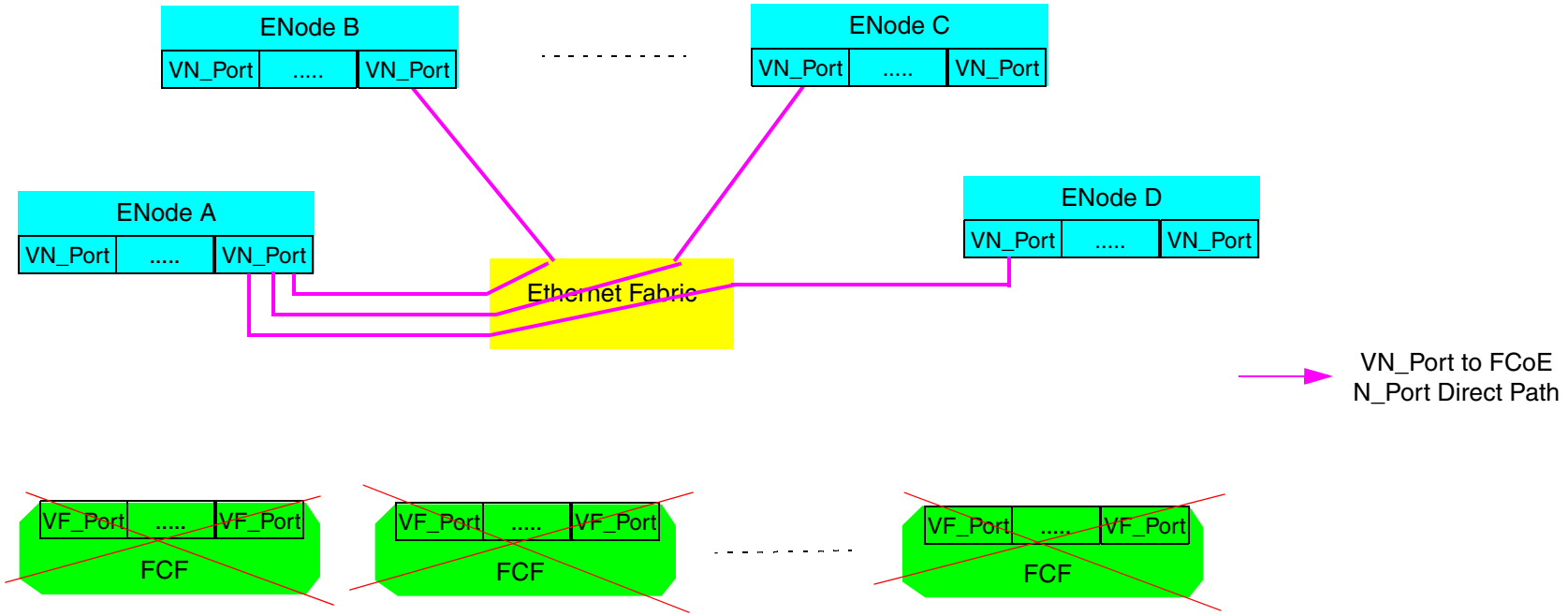

Figure 13. Ethernet Direct-Attached Fabric (EDAF)

- No FCF available to VN_Ports.
- Fabric Login performed per point-to-point configuration protocol.
- Mechanism required to identify accessible VN_Ports and mapped MAC address, e.g. an I/O configuration definition mechanism.
- Zoning enforcement required without access to an FCF (ethernet-switch based)